NO.	NAME	MATERIAL	WEIGHT(g)	MARK
1	Cap	PP	14±1g	
2	gasket	PE		
3	Inner Bottle	PP	34±2g	
4	Outer Bottle	PP	35.6±2g	
5				
6				
7				

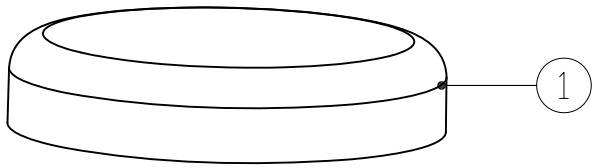

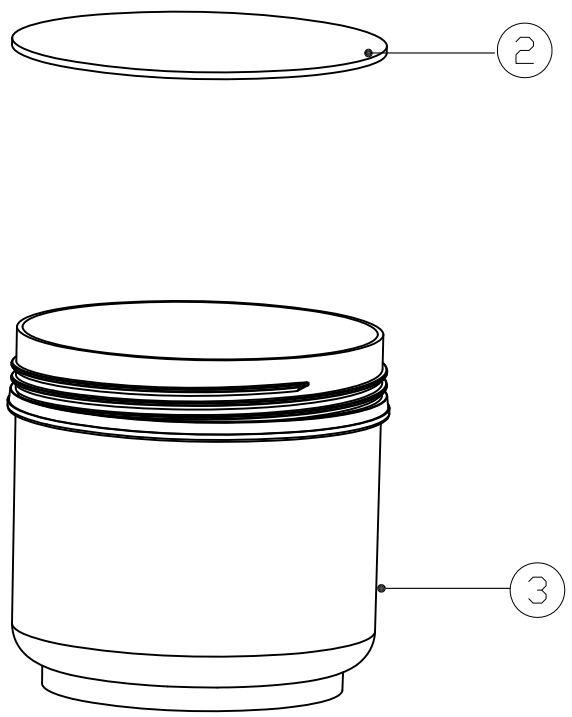

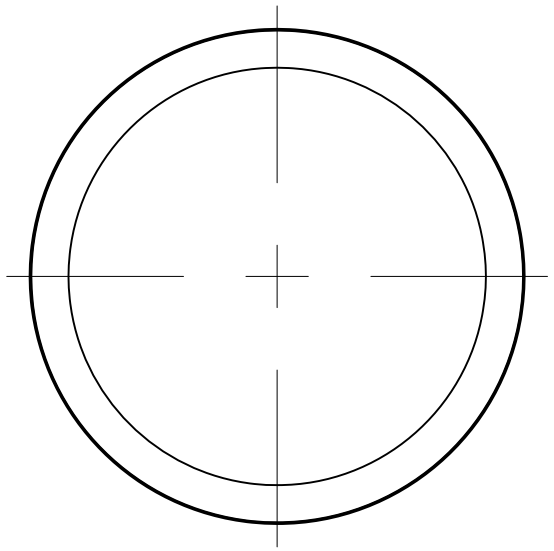

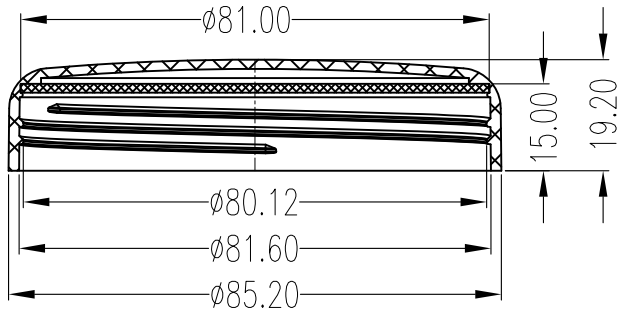

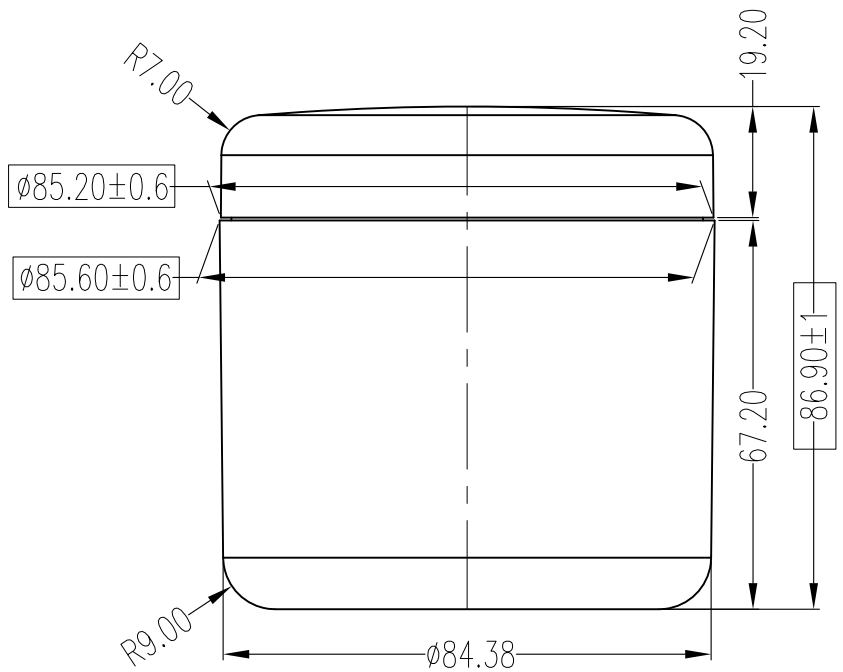

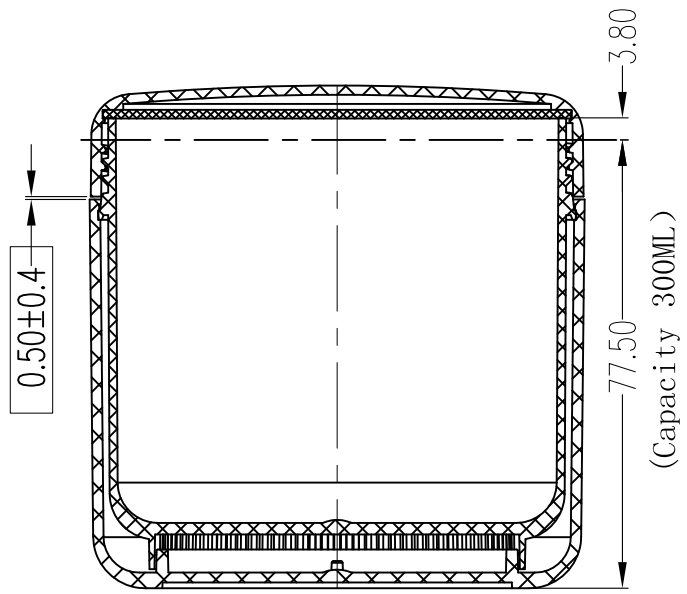

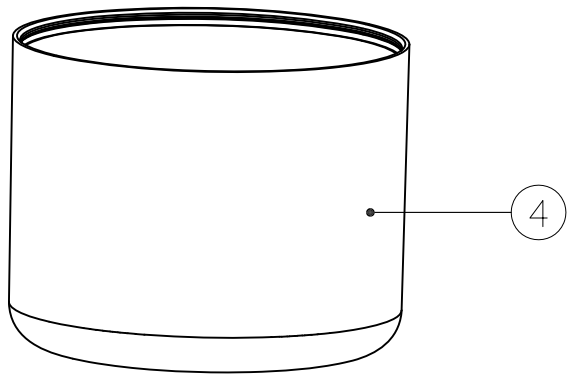

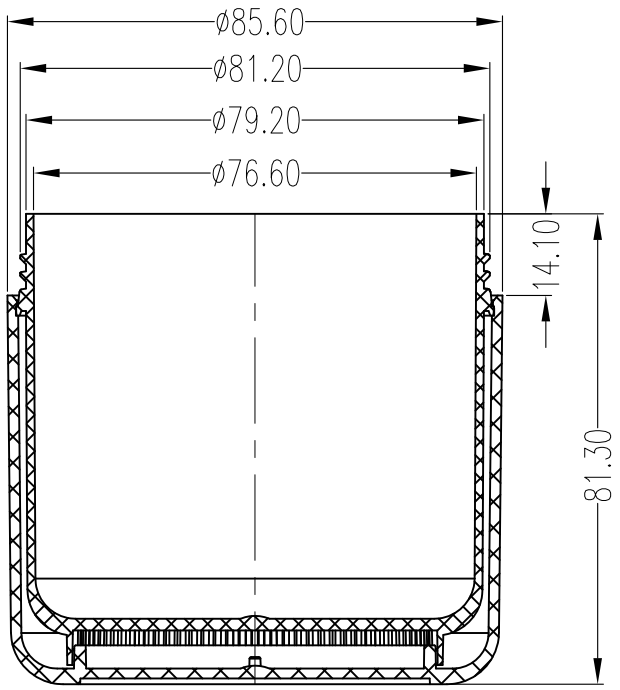

OFC:318±6ml

PJ2020015-300ml

NO.	REVISED RECORD	SIGNATURE	DATE
	THE SIZES WITH * CAN BE ADJUSTABLE FOR FUNCTION		

UNIT	SCALE	VIEW	CUSTOMER			
mm	1:1		PRODUCT	A066	MATERIAL	
			PART NAME		WEIGHT	
APPROVED	CHECKED	DRAWN	DRAWING NO.		PAGE	
		YJB 2017.08.01				

Element packaging